TAMD31D

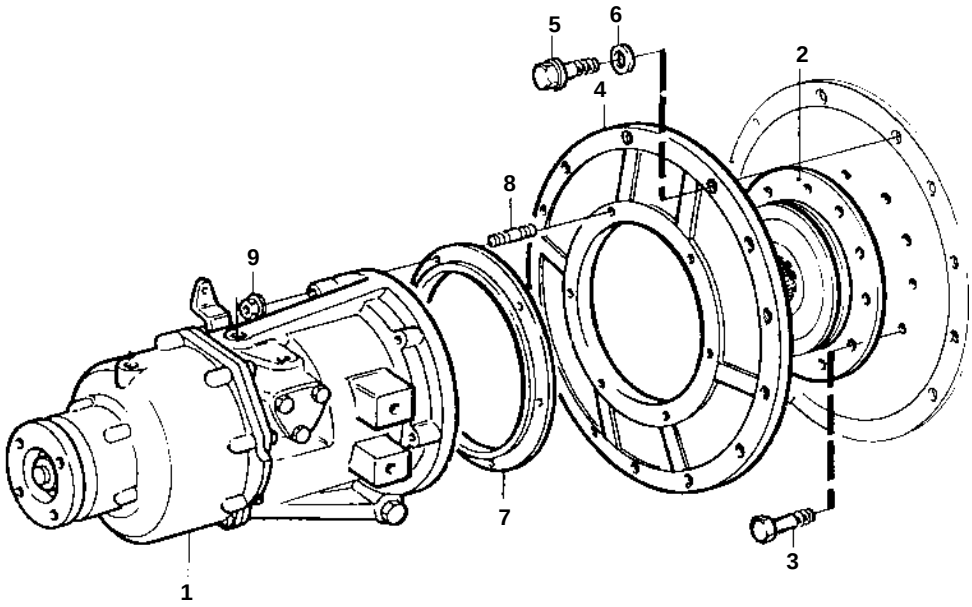

11541

TAMD31D

REF	PART NO.	QTY	DESCRIPTION	
1		1	Reversing gear	
2	854753	1	Vibration damper	
3	946173	9	Flange screw	
4	829489	1	Cover	
5	946752	11	Flange screw	
6	941908	11	Spring washer	
7	859566	1	Spacer ring	
8	953084	6	Stud	
9	971095	6	Nut	